Features

General

- 2-output clock fanout buffer for portable terminals
- Low additive jitter, low channel-to-channel skew
- Working temperature: -40°C ~ +85°C
- Supply: 2.3V to 5.5V, internal 1.8V LDO
- RoHS compliant

Input

- MCLK_IN: sine wave or square wave
  - Minimum sine-wave input: 0.3V peak-to-peak
  - Internal AC coupling, no external capacitor
- Two clock request inputs (CLK_REQ1/2)

Output

- 2 × LVCMOS outputs, 10MHz ~ 80MHz
- Each output enabled by its own clock request
- Adaptive slew-rate control reduces EMI
- Level translation from 1.8V to 1.2V
  - High 1.68V ~ 1.98V, low 1.08V ~ 1.32V
- 1.8V / 50mA LDO output for peripherals
- Propagation delay 11ns, skew ±0.5ns

Control

- Mode 1: core from the internal 1.8V LDO
- Mode 2: core from an external VLDO supply
  - 1.2V or 1.8V, depending on the application
- Standby: both requests low, 0.2µA current

Package

- 0.78mm x 1.58mm x 0.46mm, 8-ball WCSP

Key Specifications

- 0.31ps RMS additive phase jitter (Mode 1), 0.25ps (Mode 2), 26MHz
- -155dBc/Hz phase noise at 100kHz offset, 26MHz input
- Output frequency: 10MHz ~ 80MHz
- Output duty cycle: 45% ~ 55%

Applications

- Mobile phones
- GPS receivers
- Wireless LAN
- FM radio
- WiMAX
- W-BT

General Description

The SYKB6102B is a dual-channel clock fanout buffer for portable terminals that need clock buffering with minimum additive phase noise. It buffers a single master clock, typically a temperature-compensated crystal oscillator (TCXO), to several peripherals. Two clock request inputs, CLK_REQ1 and CLK_REQ2, enable the two outputs independently, and the device also provides high-to-low level translation.

The master clock input (MCLK_IN) accepts either a square wave or a sine wave; the smallest sine wave that can be accepted is 0.3V peak-to-peak. An internal AC coupling capacitor allows a TCXO to be connected directly, without any external component.

An integrated low-dropout regulator accepts 2.3V to 5.5V and delivers 1.8V at 50mA for the peripherals. In Mode 1 the core is supplied by this LDO; in Mode 2 an external 1.2V or 1.8V supply is applied to VLDO. When both clock requests are low the LDO is shut down and the device enters a 0.2µA standby mode. The device is packaged in an 8-ball WCSP with 0.4mm pitch.

Functional Block Diagram

Figure 1. SYKB6102B Block Diagram

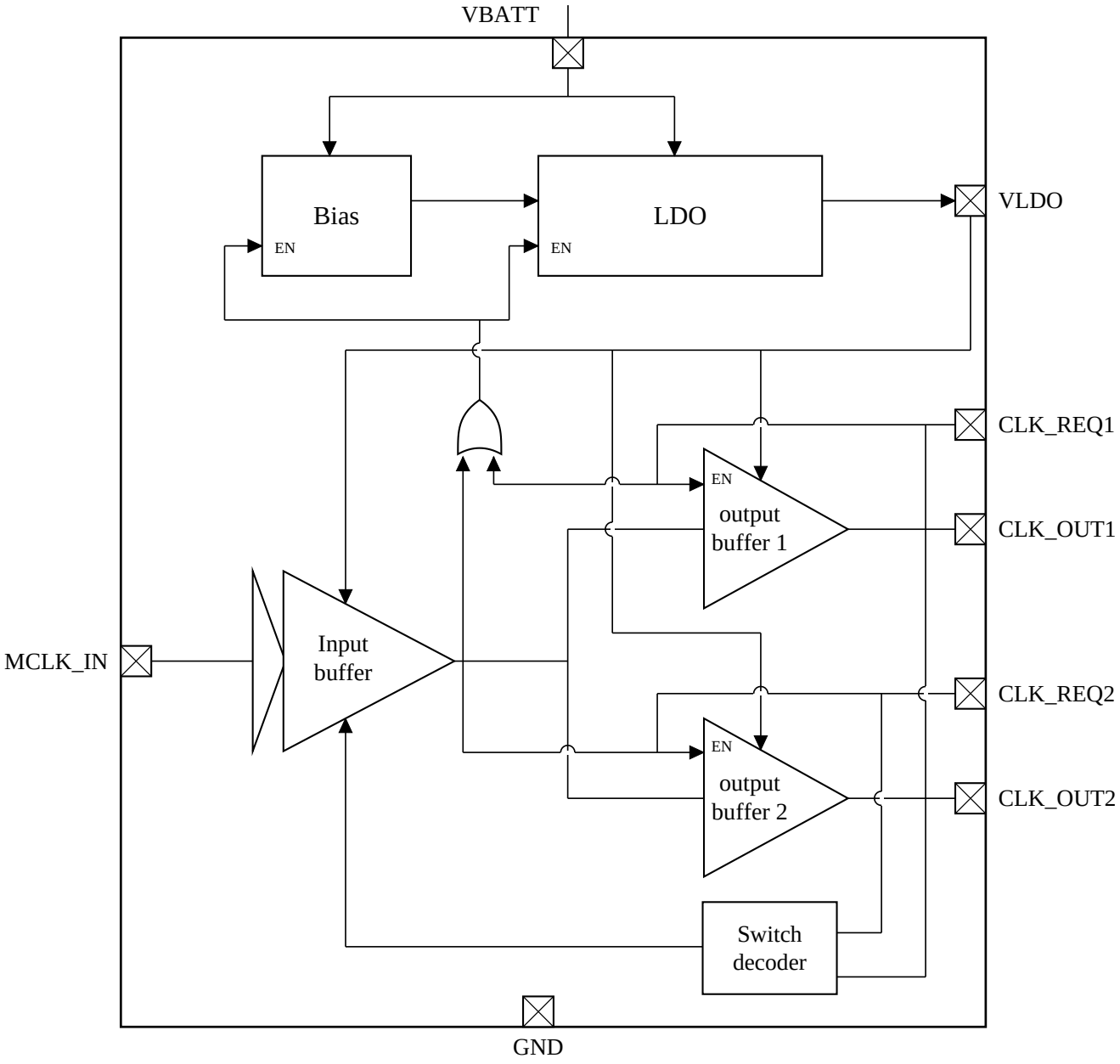

Notes:

1. LDO: Low-Dropout Regulator.
   EN: output enable, driven by the switch decoder.
2. CLK_OUT1 and CLK_OUT2 follow MCLK_IN while the corresponding CLK_REQ input is high. In standby both outputs are low and the LDO is shut down.

1 Pin Information

1.1 Pin Assignment

Figure 2. 8-Ball WCSP Pin Assignment, 0.78mm x 1.58mm, 0.4mm Pitch (Top view)

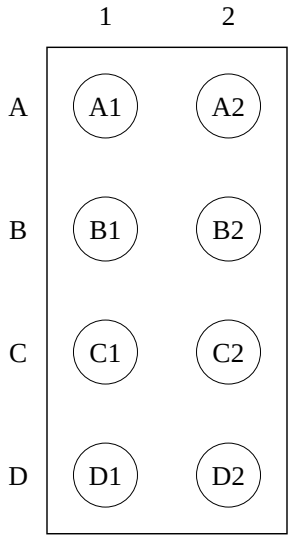

1.2 Pin Description

Table 1. Pin Description (8-Ball WCSP)

Pin NO.	Pin Name	Type	Description
A1	VBATT	Power	Power supply. Connect to 2.3V ~ 5.5V.
A2	CLK_OUT1	Output	Clock output 1, enabled by CLK_REQ1.
B1	VLDO	I/O	Internal LDO output, 1.8V / 50mA. It also supplies the internal blocks. In Mode 2 this ball is the external 1.2V or 1.8V core supply input.
B2	CLK_REQ1	Input	Clock request 1 for CLK_OUT1. A high level selects Mode 1 (VIH1) or Mode 2 (VIH2).
C1	MCLK_IN	Input	Master clock input. Internally AC-coupled; accepts a square wave or a sine wave of at least 0.3V peak-to-peak.
C2	CLK_REQ2	Input	Clock request 2 for CLK_OUT2.
D1	GND	Ground	Ground.
D2	CLK_OUT2	Output	Clock output 2, enabled by CLK_REQ2.

2 Mechanical Package Data

Figure 3. 8-Ball WCSP Package Outline (0.78mm x 1.58mm x 0.46mm, 0.4mm Pitch)

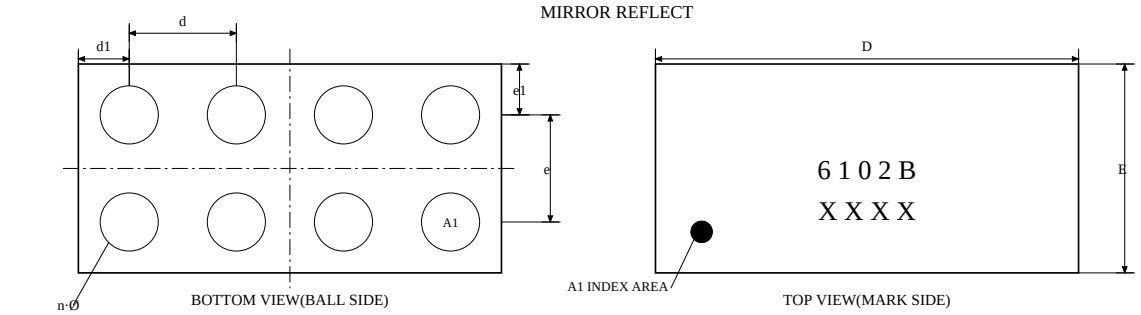

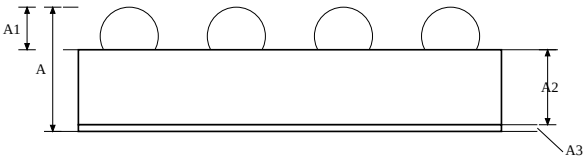

COMMON DIMENSIONS
(UNITS OF MEASURE=MILLIMETER)

SYMBOL	ITEM	MIN	NOM	MAX
A	PACKAGE HEIGHT	0.429	0.464	0.499
A1	BALL HEIGHT	0.139	0.159	0.179
A2	WAFER THICKNESS	0.268	0.280	0.292
A3	DRY FILM THICKNESS	0.022	0.025	0.028
Ø	BALL DIAMETER	0.197	0.217	0.237
D	PACKAGE SIZE X	1.565	1.580	1.595
E	PACKAGE SIZE Y	0.765	0.780	0.795
d	MIN BALL PITCH X		0.400	
d1	MIN BALL CENTER TO PACKAGE SIZE X AXIS		0.190	
e	MIN BALL PITCH Y		0.400	
e1	MIN BALL CENTER TO PACKAGE SIZE Y AXIS		0.190	
n	BALL COUNT		8	

3 Ordering Information

Part Number	Package	Temperature	Packing
SYKB6102B	0.78mm x 1.58mm x 0.46mm, 0.4mm pitch 8-ball WCSP	-40~+85°C	Tape & Reel

This document is a brief product specification sheet that outlines only the basic features. For detailed electrical specifications, please contact https://www.yxcxtal.com to request the complete version of the specification sheet.